GENERAL NOTES

A. THIS DRAWING COVERS MODIFICATIONS TO THE CONTAINER ONLY. FOR DETAILS OF THE BASIC CONTAINER SEE U. S. ARMY MISSILE COMMAND DRAWING E10242897.

B. TO MODIFY CONTAINER:

1. REMOVE TOP PANEL.
2. REMOVE MOTOR.
3. POSITION AND SECURE ITEM ① USING ITEMS ②, ③, ④, ⑤, AND ⑥. BOLTS ② WILL REQUIRE COUNTERBORE IN SKIDS, REFERENCE SECTION A-A.
4. POSITION AND SECURE ITEM ⑦ USING ITEMS ②, ③, ④, ⑤, AND ⑥. BOLTS ② WILL REQUIRE COUNTERBORE IN SKIDS, REFERENCE SECTION B-B.
5. REMOVE 1" X 4" X 15" (ONE EACH SIDE) AT AFT STOP ASSEMBLY LOCATION, AND REPLACE WITH ITEM ⑧. SECURE ITEM ⑧ USING ITEMS ⑨, ③, ④ AND ⑤. ITEM ⑧ MAY BE NOTCHED AT BOTTOM END TO PROVIDE CLEARANCE FOR ITEMS ②, ③, ④ AND ⑤.
6. REPLACE MOTOR IN CONTAINER AND SECURE TOP PANEL.

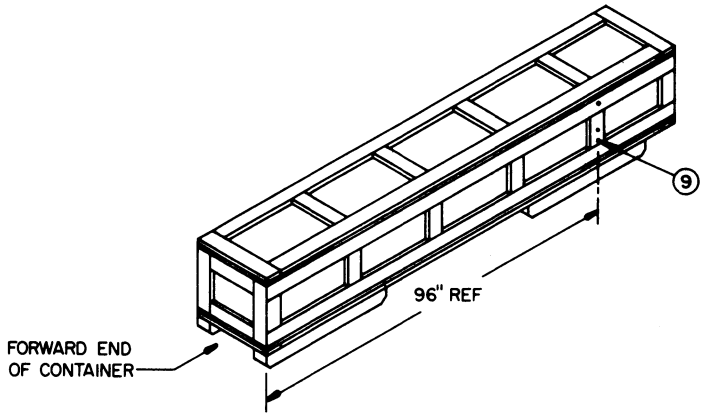

ASSEMBLY

BILL OF MATERIAL			
ITEM	QTY	NOMENCLATURE/SIZE	SPEC/MS
①	1	2" X 4" (NOM) X 16-1/2" LUMBER	MIL-C-104, GROUP I OR II
②	4	BO CARRIAGE 3/8" X 9"	MS 35751 - 91
③	12	NUT	MS 51971 - 3
④	12	WASHER, FLAT	MS 15795 - 814
⑤	12	WASHER, LOCK	MS 35338 - 141
⑥	2	BOLT, CARRIAGE 3/8" X 5-1/2"	MS 35751 - 84
⑦	1	2" X 4" (NOM) X 18" LUMBER	MIL-C-104, GROUP I OR II
⑧	2	2" X 4" (NOM) X 13" LUMBER	MIL-C-104, GROUP I OR II
⑨	6	BOLT, CARRIAGE, 3/8" X 3-1/2"	MS 35751 - 79

MODIFICATION OF SHIPPING AND STORAGE CONTAINER FOR HAWK MOTOR, XM112

REVISIONS

DRAFTSMAN | PROJ ENG | CHECKED | LOG ENGRG OFFICER | AMSMI-EP

APPROVED

U. S. ARMY MISSILE COMMAND

APPROVED BY ORDER OF COMMANDING GENERAL, U. S. ARMY MATERIEL COMMAND

USAMC AMMO CENTER

U.S. ARMY MATERIEL COMMAND

FEBRUARY 1973

CLASS	DIVISION	DRAWING	FILE
19	48	AMXAC	4321

DO NOT SCALE

PROJECT_____

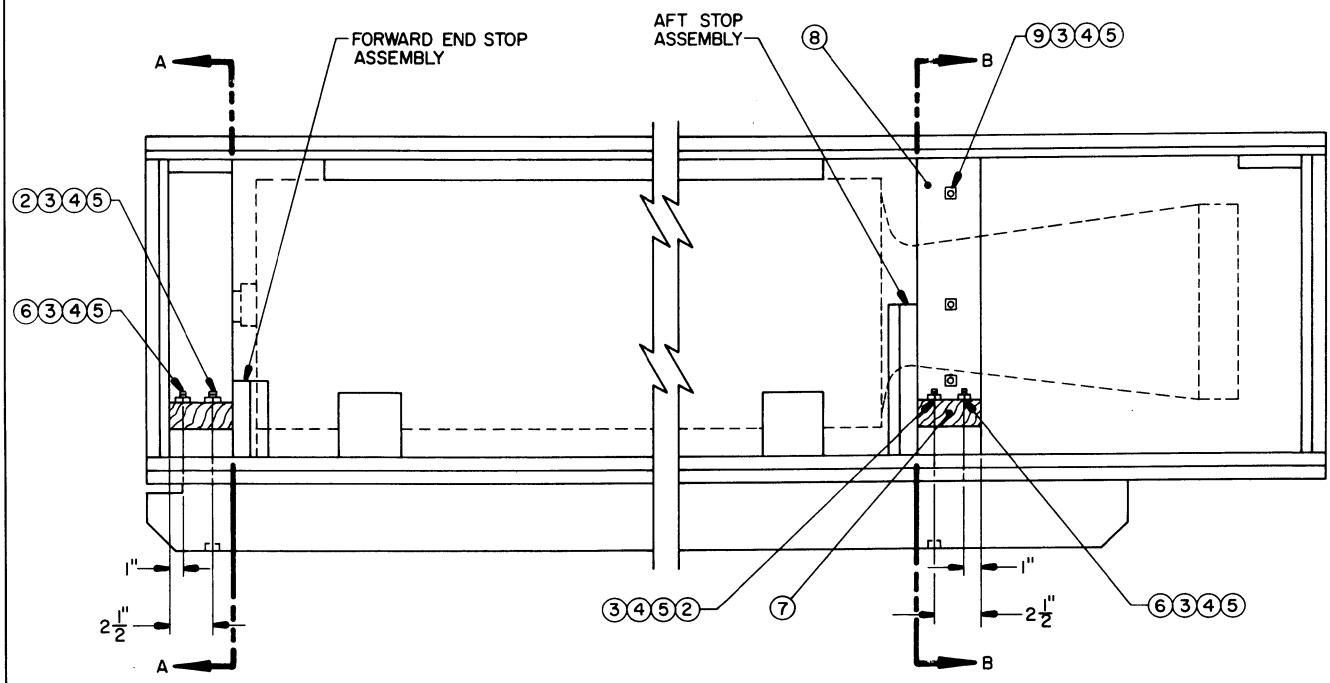

SIDE VIEW

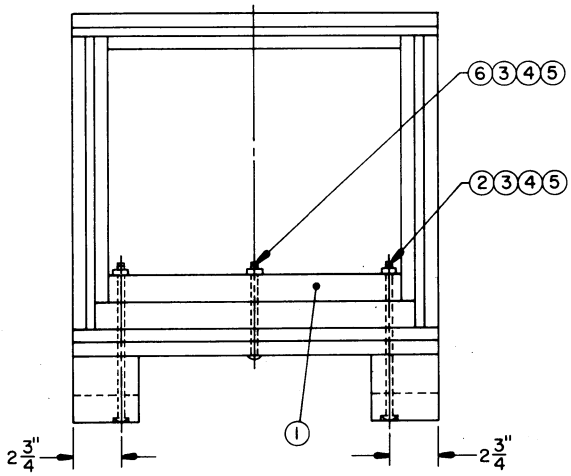

SECTION A-A

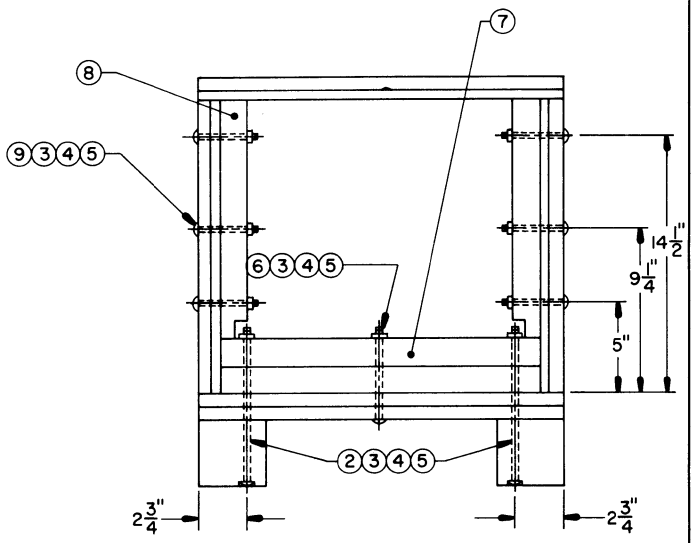

SECTION B-B